Angular Sensor

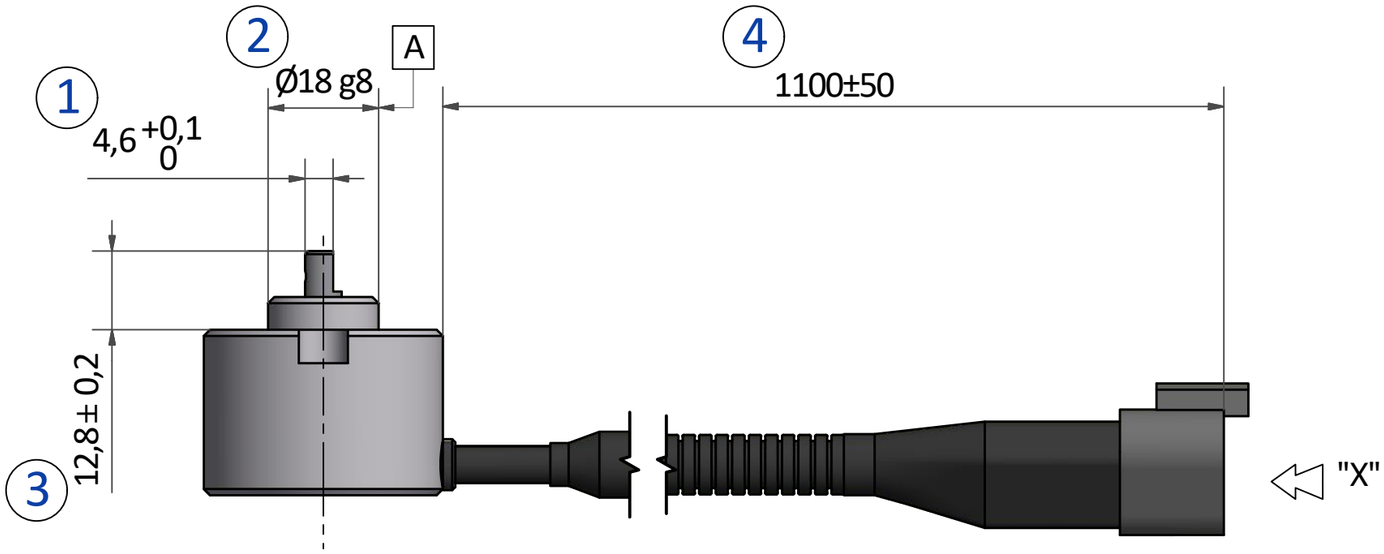

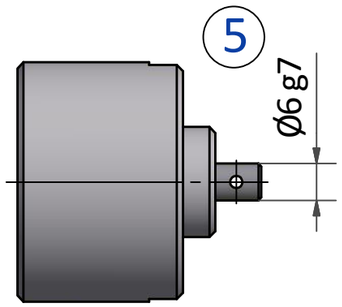

View From "X" 6

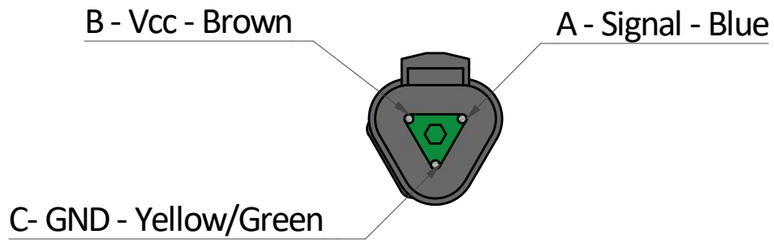

ELEN industrial vehicles sensors				www.elensrl.com		Elen Srl - Garbagnate Milanese (MI)
				Part Number:		AA020570-82 - ISIR
Rev.	Date	Sign.	Review Description	Description:		Angular Sensor Single Sig.±60°
				Designed 14/11/2023	Giulia M.	Scale : 1 : 1 (A3 format)
				Checked 14/11/2023		Dimensions without tolerance indication: ISO 2768 - m
				Approved 14/11/2023		Units mm — Page 1 /1